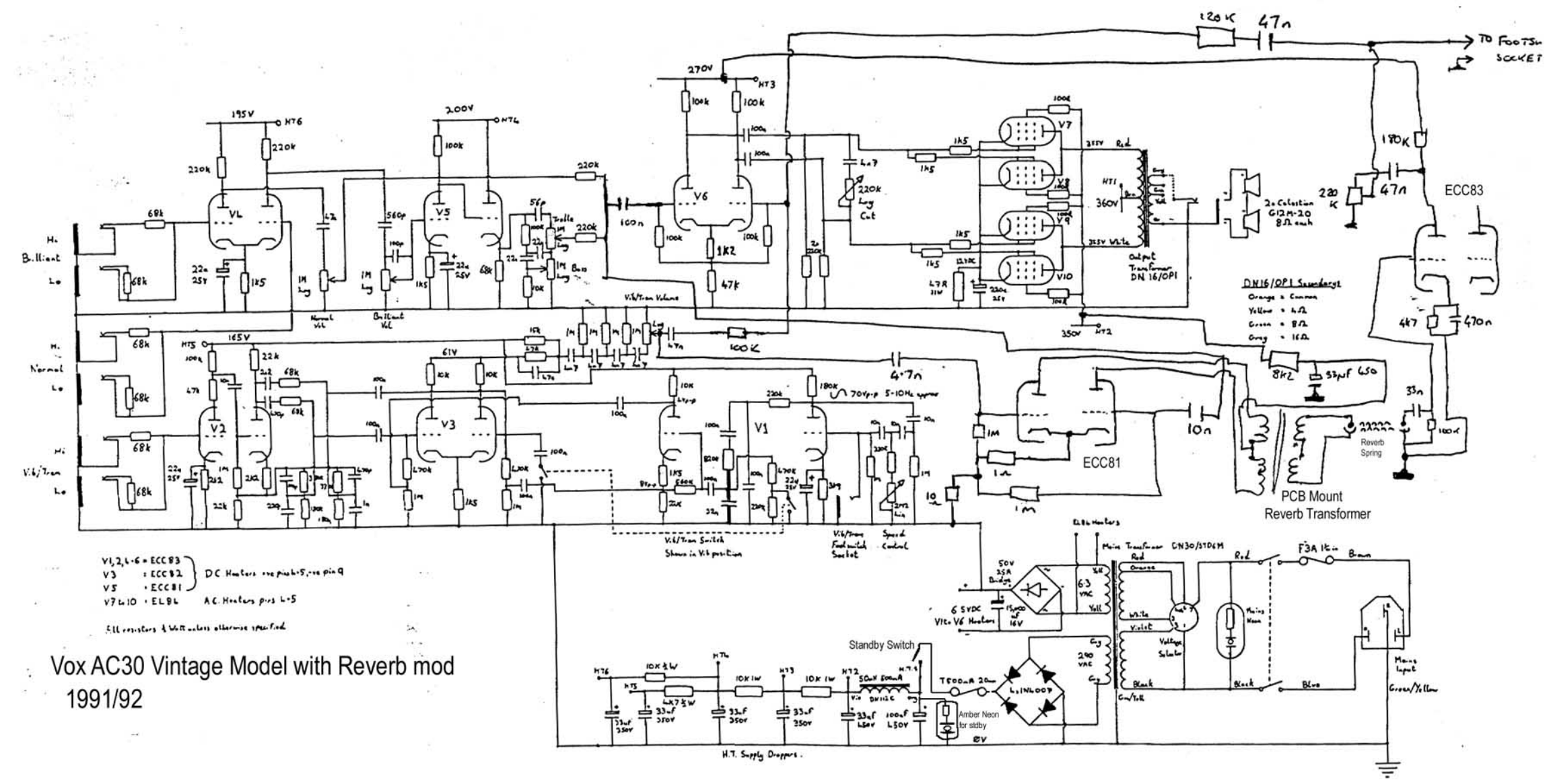
TO FOOTSW SOCKET
ECC83
ECC81
PCB Mount
Reverb Transformer
Reverb Spring
Output Transformer DN 16/OP1
DN16/OP1 Secondary
Orange = Common
Yellow = 4Ω
Green = 8Ω
Grey = 16Ω
2x Celestion G12M-20 8Ω each
V1,2,4,6 = ECC83
V3 : ECC82
V5 : ECC81
DC Heaters
V7 to 10 : EL84
AC Heaters
All resistors ¼ Watt unless otherwise specified
Standby Switch
Amber Neon for stdby
H.T. Supply Droppers.
Mains Transformer DN30/STD6M
Mains Input
Mains Neon
Voltage Selector
Hi Brilliant Lo
Hi Normal Lo
Hi V.6/Tran Lo
V.6/Tran Switch Shown in V.6 position
V.6/Tran Footswitch Socket
Speed Control
V.6/Tran Volume
Normal Vol
Brilliant Vol
Treble
Bass
Cut
Lag
Log
Lin
Red
Orange
White
Violet
Black
Blue
Green/Yellow
Brown
Grey
Yellow
F3A 1kin
Vox AC30 Vintage Model with Reverb mod
1991/92