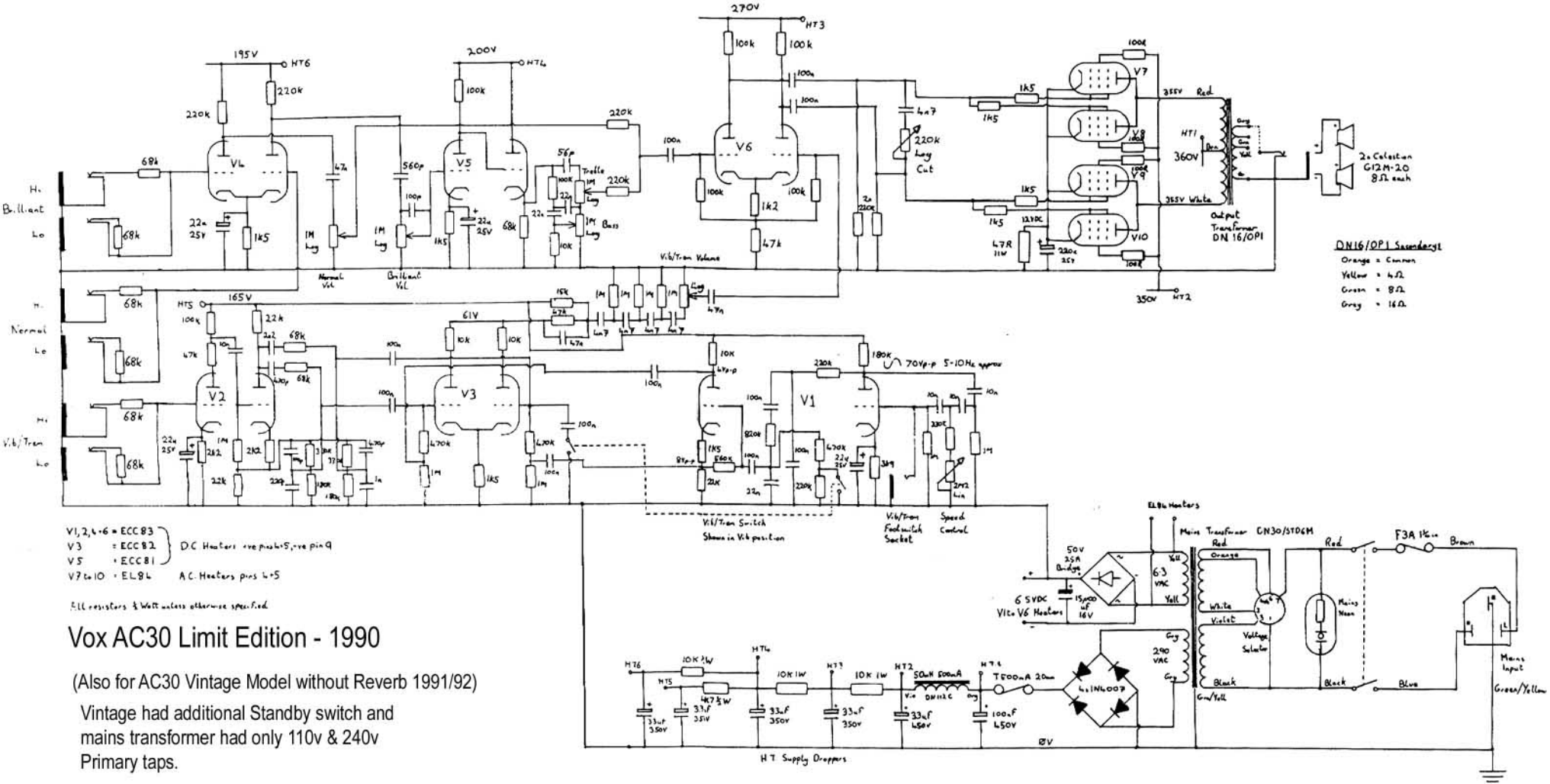
V1,2,4+6 = ECC83
V3 = ECC82
V5 = ECC81
D.C Heaters +ve pin 4+5, -ve pin 9
V7 to 10 = EL84
A.C. Heaters pins 4+5
All resistors ¼ Watt unless otherwise specified
Vox AC30 Limit Edition - 1990
(Also for AC30 Vintage Model without Reverb 1991/92)
Vintage had additional Standby switch and mains transformer had only 110v & 240v Primary taps.
Output Transformer DN 16/OP1
DN16/OP1 Secondary:
Orange = Common
Yellow = 4Ω
Green = 8Ω
Grey = 16Ω
2x Celestion G12M-20 8Ω each
Mains Transformer CN30/STD6M
Voltage Selector
Mains Input
H.T. Supply Droppers
Vib/Tremolo Switch
Shown in Vib position
Vib/Tremolo Footswitch Socket
Speed Control
Normal Vol
Brilliant Vol
Treble
Bass
Vib/Tremolo Volume
Hi Brilliant Lo
Hi Normal Lo
Hi Vib/Tremolo Lo
Cut
Bright
Red
White
Black
Blue
Brown
Green/Yellow
Grey/Yellow
Violet
Orange
Yellow
Grey
F3A 1kin
Mains Neon
6.3 VAC
290 VAC
50V 25A Bridge
6.5VDC V1 to V6 Heaters
EL84 Heaters
4x1N4007
T500mA 20mm
DN112C
0V