VOX AC30TB - Standard - 1989

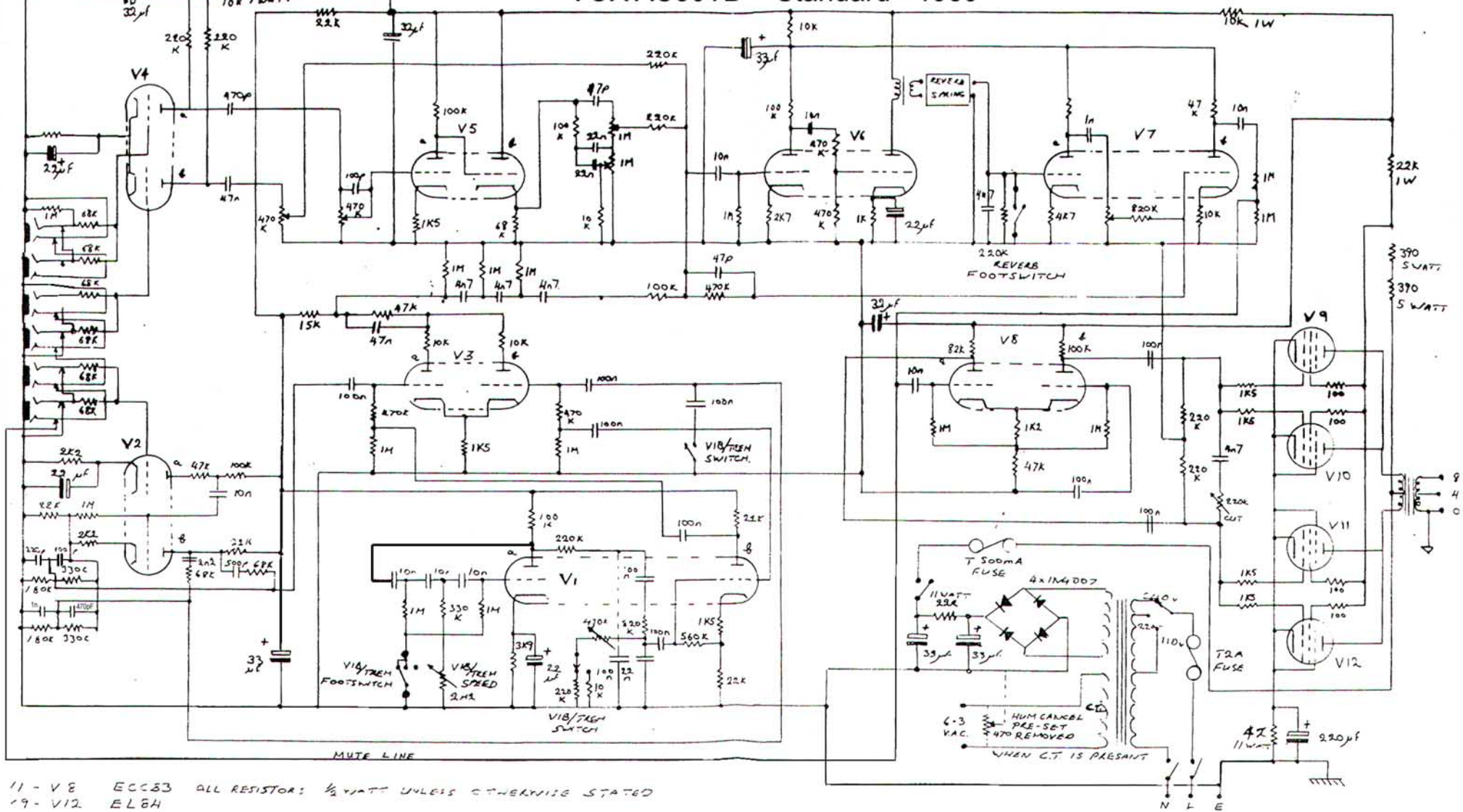

11 - V8 ECC83 ALL RESISTORS ½ WATT UNLESS OTHERWISE STATED
19 - V12 EL84