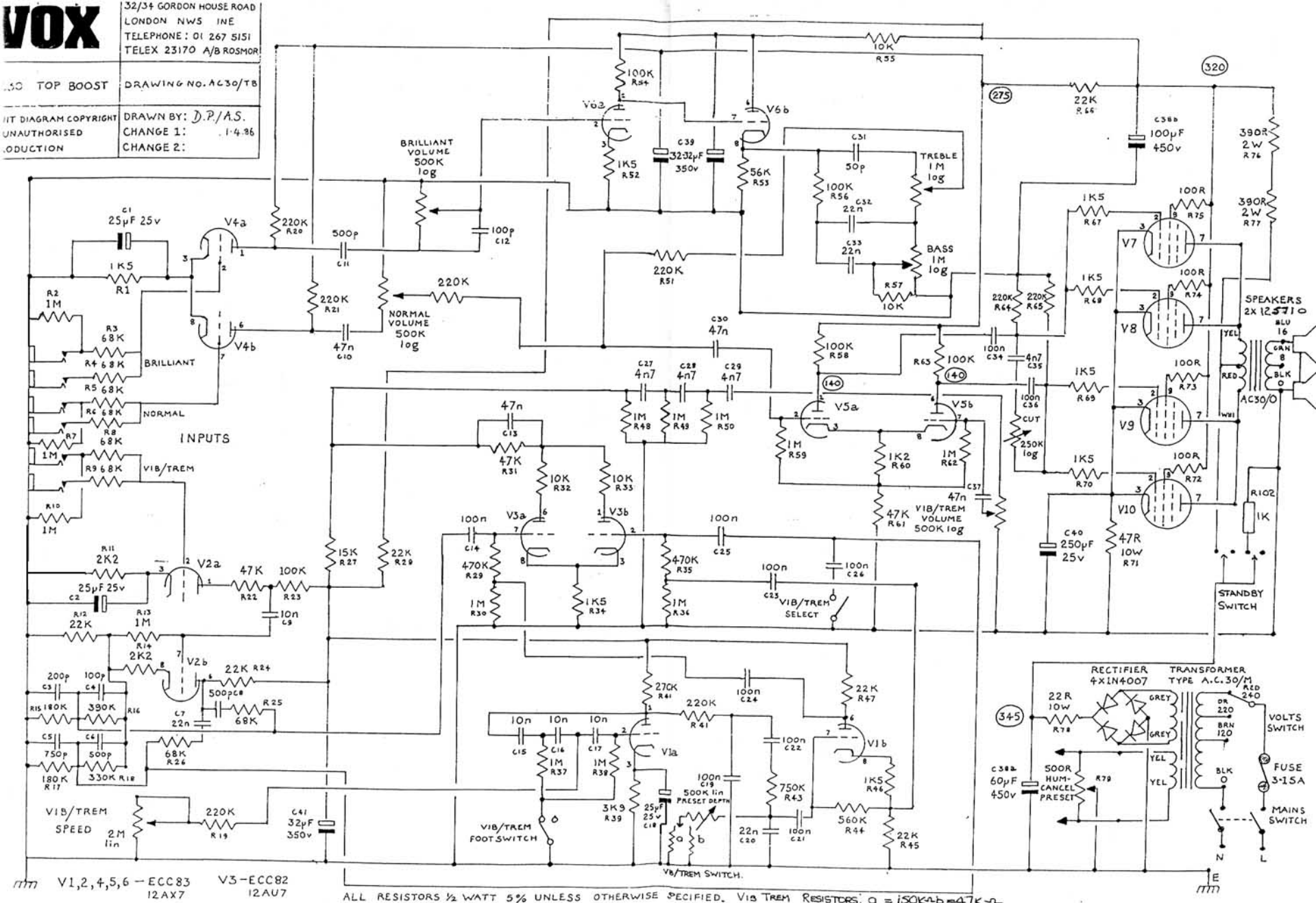
VOX
32/34 GORDON HOUSE ROAD
LONDON NW5 1NE
TELEPHONE: 01 267 5151
TELEX 23170 A/B ROSMOR
AC30 TOP BOOST
DRAWING NO. AC30/TB
DRAWN BY: D.P./A.S.
CHANGE 1: 1.4.86
CHANGE 2:
V1,2,4,5,6 – ECC83 12AX7
V3 – ECC82 12AU7
V7,8,9,10 – EL84
ALL RESISTORS ½ WATT 5% UNLESS OTHERWISE SPECIFIED. VIB TREM RESISTORS; a = 150KΩ b = 47KΩ
INPUTS
BRILLIANT
NORMAL
VIB/TREM
BRILLIANT VOLUME 500K log
NORMAL VOLUME 500K log
TREBLE 1M log
BASS 1M log
CUT 250K log
VIB/TREM VOLUME 500K log
VIB/TREM SELECT
VIB/TREM FOOT SWITCH
VIB/TREM SPEED 2M lin
VIB/TREM SWITCH.
500K lin PRESET DEPTH
RECTIFIER 4X1N4007
TRANSFORMER TYPE A.C.30/M
500R HUM-CANCEL PRESET
VOLTS SWITCH
FUSE 3·15A
MAINS SWITCH
STANDBY SWITCH
SPEAKERS 2X12 5710
AC30/0