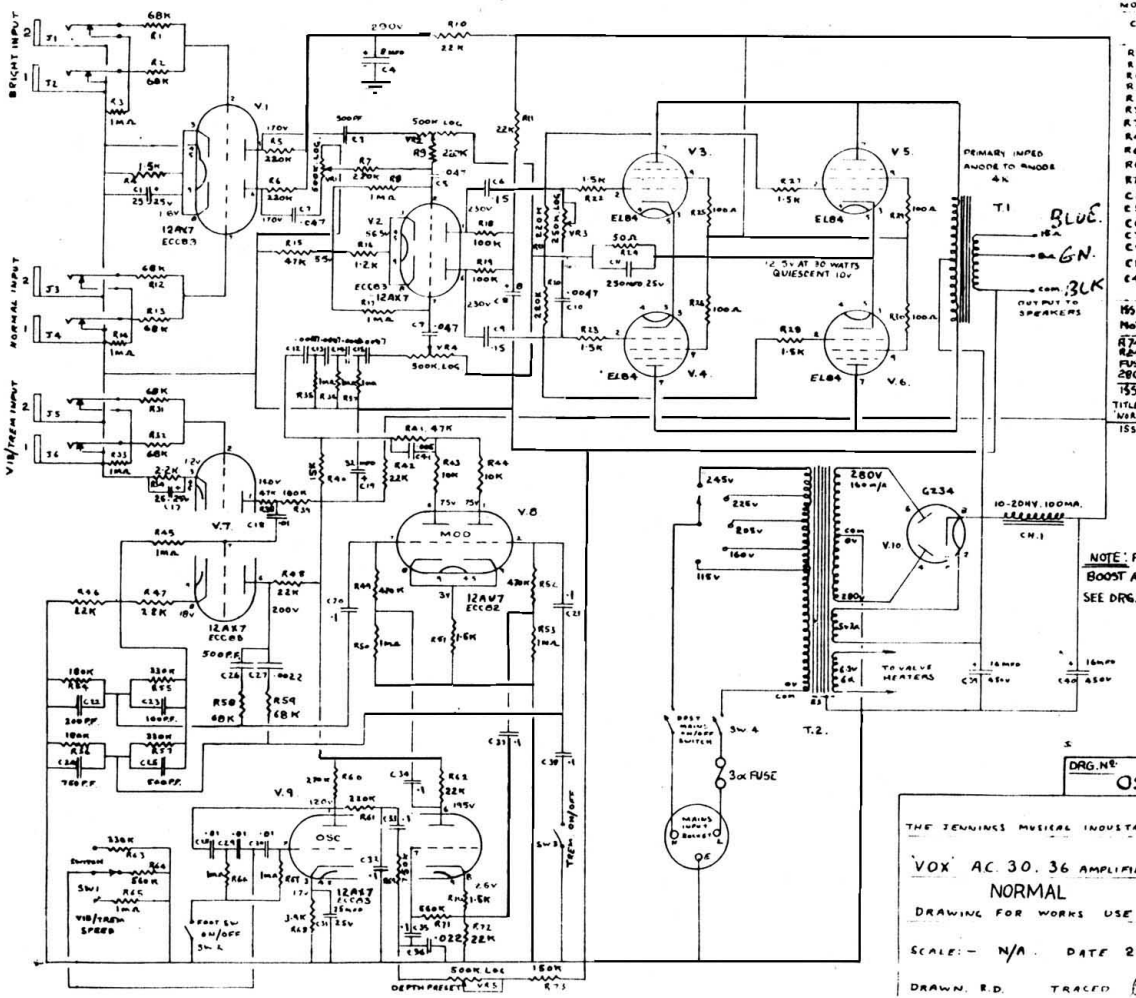
BRIGHT INPUT
NORMAL INPUT
VIB/TREM INPUT
V.1
12AX7
ECC83
V.2
ECC83
12AX7
V.3
EL84
V.4
EL84
V.5
EL84
V.6
EL84
PRIMARY IMPED ANODE TO ANODE 4K
T.1
BLUE
GN
BLK
OUTPUT TO SPEAKERS
12.5V AT 30 WATTS QUIESCENT 10V
V.7
12AX7
ECC83
V.8
MOD
12AX7
ECC82
V.9
OSC
12AX7
ECC83
TREM ON/OFF
DEPTH PRESET
VIB/TREM SPEED
BOOST SW ON/OFF
MODIFICATIONS
C41 ADDED.
7-2-61
R4 WAS 2.2K
R5 " 100K
R6 " 100K
R7 " 270K
R9 " 2.70K
R38 " 1MΩ
R39 " 150K
R40 " 12K
R65 " 1.5MΩ
R69 " 1MΩ
R74 ADDED
C2 WAS ·01mfd
C5 " ·01 -
C6 " ·01 -
C7 " ·01 -
C9 " ·01 -
C16 DELETED
C41 WAS ·01mfd
8-5-61
195.2.14.6.63 AT
NOTE ADDED
R74 DELETED
R24 WAS 80Ω
FUSE MOD.
280V WAS 285V
155.3.11.10.63 AT
TITLE CHANGED
'NORMAL' ADDED
155.4.11.9.64 AT
T.2.
GZ34
V.10
10-20HY. 100MA.
CH.1
TO VALVE HEATERS
16mfd 450V
16mfd 450V
MAINS INPUT BOARD
3A FUSE
SW 4
NOTE: FOR TOP BOOST AMPLIFIER SEE DRG.No. 05/C10.
DRG.No. 05/065
THE JENNINGS MUSICAL INDUSTRIES LTD.
'VOX' AC. 30. 36 AMPLIFIER CIRCUIT
NORMAL
DRAWING FOR WORKS USE ONLY
SCALE:- N/A.
DATE 23-4-60.
DRAWN. R.D.
TRACED